MEAN WELL

50W Single Output Switching Power Supply

LRS-50 series



R33100
RoHS

Features

- Universal AC input / Full range
- Withstand 300VAC surge input for 5 second
- No load power consumption<0.2W
- Miniature size and 1U low profile
- High operating temperature up to 70℃
- Protections: Short circuit / Overload / Over voltage
- Cooling by free air convection
- Compliance to IEC/EN 60335-1(PD3) and IEC/EN61558-1, -2-16 for household appliances
- Operating altitude up to 5000 meters (Note.8)
- Withstand 5G vibration test
- High efficiency, long life and high reliability
- LED indicator for power on
- Over voltage category III
- 100% full load burn-in test
- 3 years warranty

Applications

- Industrial automation machinery
- Industrial control system
- Mechanical and electrical equipment
- Electronic instruments, equipments or apparatus
- Household appliances

Description

LRS-50 series is a 50W single-output enclosed type power supply with 30mm of low profile design. Adopting the full range 85~264VAC input, the entire series provides an output voltage line of 3.3V, 5V, 12V, 15V, 24V, 36V and 48V.

In addition to the high efficiency up to 90%, the design of metallic mesh case enhances the heat dissipation of LRS-50 that the whole series operates from -30℃ through 70℃ under air convection without a fan. Delivering an extremely low no load power consumption (less than 0.2W), it allows the end system to easily meet the worldwide energy requirement. LRS-50 has the complete protection functions and 5G anti-vibration capability; it is complied with the international safety regulations such as TUV EN60950-1, EN60335-1,EN61558-1/-2-16, UL60950-1 and GB4943. LRS-50 series serves as a high price-to-performance power supply solution for various industrial applications.

Model Encoding

LRS - 50 - 3.3

- 3.3 — Output voltage
- 50 — Rated wattage
- LRS — Series name

SPECIFICATION

MODEL		LRS-50-3.3	LRS-50-5	LRS-50-12	LRS-50-15	LRS-50-24	LRS-50-36	LRS-50-48
OUTPUT	DC VOLTAGE	3.3V	5V	12V	15V	24V	36V	48V
	RATED CURRENT	10A	10A	4.2A	3.4A	2.2A	1.45A	1.1A
	CURRENT RANGE	0 ~ 10A	0 ~ 10A	0 ~ 4.2A	0 ~ 3.4A	0 ~ 2.2A	0 ~ 1.45A	0 ~ 1.1A
	RATED POWER	33W	50W	50.4W	51W	52.8W	52.2W	52.8W
	RIPPLE & NOISE (max.) Note.2	80mVp-p	80mVp-p	120mVp-p	120mVp-p	150mVp-p	200mVp-p	200mVp-p
	VOLTAGE ADJ. RANGE	2.97 ~ 3.6V	4.5 ~ 5.5V	10.2 ~ 13.8V	13.5 ~ 18V	21.6 ~ 28.8V	32.4 ~ 39.6V	43.2 ~ 52.8V
	VOLTAGE TOLERANCE Note.3	±3.0%	±2.0%	±1.0%	±1.0%	±1.0%	±1.0%	±1.0%
	LINE REGULATION Note.4	±0.5%	±0.5%	±0.5%	±0.5%	±0.5%	±0.5%	±0.5%
	LOAD REGULATION Note.5	±2.0%	±1.0%	±0.5%	±0.5%	±0.5%	±0.5%	±0.5%
	SETUP, RISE TIME	1000ms, 30ms/230VAC 2000ms,30ms/115VAC at full load						
	HOLD UP TIME (Typ.)	30ms/230VAC 12ms/115VAC at full load						
INPUT	VOLTAGE RANGE	85 ~ 264VAC 120 ~ 373VDC						
	FREQUENCY RANGE	47 ~ 63Hz						
	EFFICIENCY (Typ.)	80%	83%	86%	88%	88%	89%	90%
	AC CURRENT (Typ.)	0.95A/115VAC 0.56A/230VAC						
	INRUSH CURRENT (Typ.)	COLD START 45A/230VAC						
	LEAKAGE CURRENT	<0.75mA / 240VAC						
PROTECTION	OVER LOAD	110 ~ 150% rated output power						
		Protection type : Hiccup mode, recovers automatically after fault condition is removed						
	OVER VOLTAGE	3.8 ~ 4.45V	5.9~ 7.3V	13.8 ~ 16.2V	18.75 ~ 21.75V	28.8 ~ 33.6V	41.4 ~ 48.6V	55.2 ~ 64.8V
		Protection type : Shut down o/p voltage, re-power on to recover						
ENVIRONMENT	WORKING TEMP.	-30 ~ +70℃ (Refer to "Derating Curve")						
	WORKING HUMIDITY	20 ~ 90% RH non-condensing						
	STORAGE TEMP., HUMIDITY	-40 ~ +85℃, 10 ~ 95% RH non-condensing						
	TEMP. COEFFICIENT	±0.03%/℃ (0 ~ 50℃)						
	VIBRATION	10 ~ 500Hz, 5G 10min./1cycle, 60min. each along X, Y, Z axes						
	OVER VOLTAGE CATEGORY	III; Compliance to EN61558, EN50178, EN60664-1, EN62477-1; altitude up to 2000 meters						
SAFETY & EMC (Note 9)	SAFETY STANDARDS	UL60950-1, TUV EN60950-1, EN60335-1, EN61558-1/-2-16, CCC GB4943.1, BSMI CNS14336-1, EAC TP TC 004, AS/NZS 60950.1(by CB) approved						
	WITHSTAND VOLTAGE	I/P-O/P:4KVAC I/P-FG:2KVAC O/P-FG:1.25KVAC						
	ISOLATION RESISTANCE	I/P-O/P, I/P-FG, O/P-FG:100M Ohms / 500VDC / 25℃/ 70% RH						
	EMC EMISSION	Compliance to EN55032 (CISPR32) Class B, EN55014, EN61000-3-2,-3, GB/T 9254, BSMI CNS13438, EAC TP TC 020						
	EMC IMMUNITY	Compliance to EN61000-4-2,3,4,5,6,8,11, EN61000-6-2 (EN50082-2), heavy industry level, criteria A, EAC TP TC 020						
OTHERS	MTBF	645K hrs min. MIL-HDBK-217F (25℃)						
	DIMENSION	99*82*30mm (L*W*H)						
	PACKING	0.23Kg; 60pcs/14.8Kg/0.88CUFT						

NOTE

1. All parameters NOT specially mentioned are measured at 230VAC input, rated load and 25℃ of ambient temperature.
2. Ripple & noise are measured at 20MHz of bandwidth by using a 12" twisted pair-wire terminated with a 0.1uf & 47uf parallel capacitor.
3. Tolerance : includes set up tolerance, line regulation and load regulation.
4. Line regulation is measured from low line to high line at rated load.
5. Load regulation is measured from 0% to 100% rated load.
6. Length of set up time is measured at cold first start. Turning ON/OFF the power supply very quickly may lead to increase of the set up time.
7. 3.3V,5V when the load factor 0~50%, the switching power less is reduced by burst operation, which will cause ripple and ripple noise to go beyond the specifications.
8. The ambient temperature derating of 5℃/1000m is needed for operating altitude greater than 2000m(6500ft).
9. The power supply is considered a component which will be installed into a final equipment. All the EMC tests are been executed by mounting the unit on a 360mm*360mm metal plate with 1mm of thickness. The final equipment must be re-confirmed that it still meets EMC directives. For guidance on how to perform these EMC tests, please refer to “EMI testing of component power supplies.” (as available on http://www.meanwell.com)

■ Block Diagram

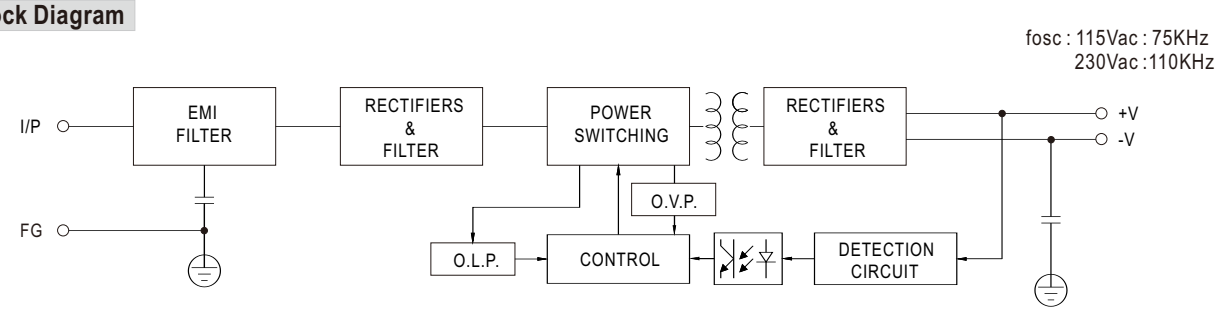

■ Derating Curve

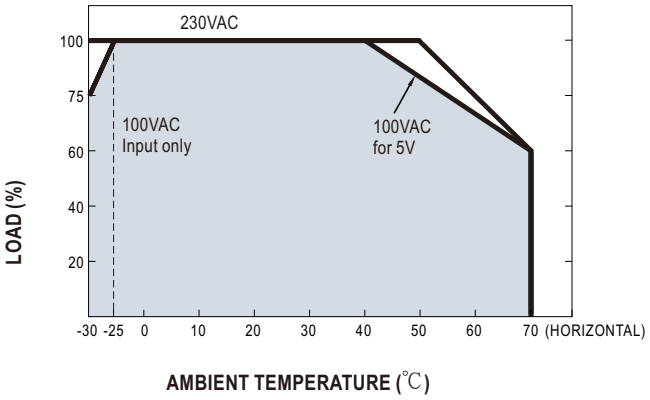

■ Static Characteristics

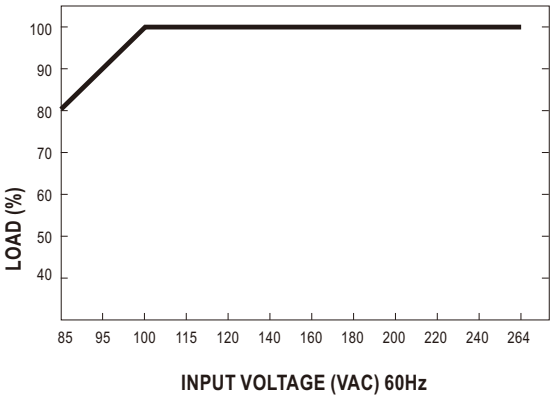

■ Mechanical Specification

Case No.239A Unit:mm

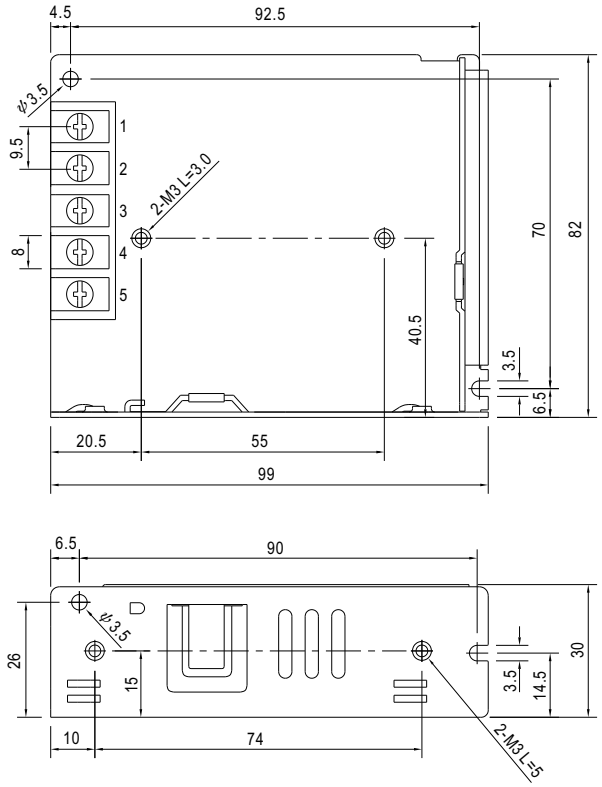

Terminal Pin No. Assignment

Pin No.	Assignment	Pin No.	Assignment
1	AC/L	4	DC OUTPUT -V
2	AC/N	5	DC OUTPUT +V
3	FG ⏚		

■ Installation Manual

Please refer to : http://www.meanwell.com/manual.html

MEAN WELL

100W Single Output Switching Power Supply

LRS-100 series



R33100
RoHS

Features

- Universal AC input / Full range
- Withstand 300VAC surge input for 5 second
- Protections: Short circuit / Overload / Over voltage
- Cooling by free air convection
- Miniature size and 1U low profile
- Compliance to IEC/EN 60335-1(PD3) and IEC/EN61558-1, 2-16 for household appliances
- Operating altitude up to 5000 meters (Note.7)
- Withstand 5G vibration test
- LED indicator for power on
- No load power consumption<0.3W
- Over voltage category III
- 100% full load burn-in test
- High operating temperature up to 70℃
- High efficiency, long life and high reliability
- 3 years warranty

Applications

- Industrial automation machinery
- Industrial control system
- Mechanical and electrical equipment
- Electronic instruments, equipments or apparatus
- Household appliances

Description

LRS-100 series is a 100W single-output enclosed type power supply with 30mm of low profile design. Adopting the full range 85~264VAC input, the entire series provides an output voltage line of 3.3V, 5V, 12V, 15V, 24V, 36V and 48V.

In addition to the high efficiency up to 91%, the design of metallic mesh case enhances the heat dissipation of LRS-100 that the whole series operates from -30℃ through 70℃ under air convection without a fan. Delivering an extremely low no load power consumption (less than 0.3W), it allows the end system to easily meet the worldwide energy requirement. LRS-100 has the complete protection functions and 5G anti-vibration capability; it is complied with the international safety regulations such as TUV EN60950-1, EN60335-1,EN61558-1/-2-16, UL60950-1 and GB4943. LRS-100 series serves as a high price-to-performance power supply solution for various industrial applications.

Model Encoding

LRS - 100 - 3.3

- 3.3 — Output voltage
- 100 — Rated wattage
- LRS — Series name

SPECIFICATION

MODEL		LRS-100-3.3	LRS-100-5	LRS-100-12	LRS-100-15	LRS-100-24	LRS-100-36	LRS-100-48
OUTPUT	DC VOLTAGE	3.3V	5V	12V	15V	24V	36V	48V
	RATED CURRENT	20A	18A	8.5A	7A	4.5A	2.8A	2.3A
	CURRENT RANGE	0 ~ 20A	0 ~ 18A	0 ~ 8.5A	0 ~ 7A	0 ~ 4.5A	0 ~ 2.8A	0 ~ 2.3A
	RATED POWER	66W	90W	102W	105W	108W	100.8W	110.4W
	RIPPLE & NOISE (max.) Note.2	100mVp-p	100mVp-p	120mVp-p	120mVp-p	150mVp-p	200mVp-p	200mVp-p
	VOLTAGE ADJ. RANGE	2.97 ~ 3.6V	4.5 ~ 5.5V	10.2 ~ 13.8V	13.5 ~ 18V	21.6 ~ 28.8V	32.4 ~ 39.6V	43.2 ~ 52.8V
	VOLTAGE TOLERANCE Note.3	±3.0%	±2.0%	±1.0%	±1.0%	±1.0%	±1.0%	±1.0%
	LINE REGULATION Note.4	±0.5%	±0.5%	±0.5%	±0.5%	±0.5%	±0.5%	±0.5%
	LOAD REGULATION Note.5	±2.0%	±1.0%	±0.5%	±0.5%	±0.5%	±0.5%	±0.5%
	SETUP, RISE TIME	500ms, 30ms/230VAC 500ms,30ms/115VAC at full load						
	HOLD UP TIME (Typ.)	55ms/230VAC 10ms/115VAC at full load						
INPUT	VOLTAGE RANGE	85 ~ 264VAC 120 ~ 373VDC (Withstand 300VAC surge for 5sec. Without damage)						
	FREQUENCY RANGE	47 ~ 63Hz						
	EFFICIENCY (Typ.)	84.5%	86%	88%	88.5%	90%	90.5%	91%
	AC CURRENT (Typ.)	1.9A/115VAC 1.2A/230VAC						
	INRUSH CURRENT (Typ.)	COLD START 50A/230VAC						
	LEAKAGE CURRENT	<0.75mA / 240VAC						
PROTECTION	OVER LOAD	110 ~ 150% rated output power						
		Protection type : Hiccup mode, recovers automatically after fault condition is removed						
	OVER VOLTAGE	3.8 ~ 4.45V	5.75 ~ 6.75V	13.8 ~ 16.2V	18.75 ~ 21.75V	28.8 ~ 33.6V	41.4 ~ 48.6V	55.2 ~ 64.8V
		Protection type : Shut down o/p voltage, re-power on to recover						
ENVIRONMENT	WORKING TEMP.	-30 ~ +70℃ (Refer to "Derating Curve")						
	WORKING HUMIDITY	20 ~ 90% RH non-condensing						
	STORAGE TEMP., HUMIDITY	-40 ~ +85℃, 10 ~ 95% RH non-condensing						
	TEMP. COEFFICIENT	±0.03%/℃ (0 ~ 50℃)						
	VIBRATION	10 ~ 500Hz, 5G 10min./1cycle, 60min. each along X, Y, Z axes						
	OVER VOLTAGE CATEGORY	III; Compliance to EN61558, EN50178, EN60664-1, EN62477-1; altitude up to 2000 meters						
SAFETY & EMC (Note 8)	SAFETY STANDARDS	UL60950-1, TUV EN60950-1, EN60335-1, EN61558-1/-2-16, CCC GB4943.1, BSMI CNS14336-1, EAC TP TC 004, AS/NZS 60950.1(by CB) approved						
	WITHSTAND VOLTAGE	I/P-O/P:4KVAC I/P-FG:2KVAC O/P-FG:1.25KVAC						
	ISOLATION RESISTANCE	I/P-O/P, I/P-FG, O/P-FG:100M Ohms / 500VDC / 25℃ / 70% RH						
	EMC EMISSION	Compliance to EN55032 (CISPR32) Class B, EN55014, EN61000-3-2,-3, GB/T 9254, BSMI CNS13438, EAC TP TC 020						
	EMC IMMUNITY	Compliance to EN61000-4-2,3,4,5,6,8,11, EN61000-6-2 (EN50082-2), heavy industry level, criteria A, EAC TP TC 020						
OTHERS	MTBF	720.6K hrs min. MIL-HDBK-217F (25℃)						
	DIMENSION	129*97*30mm (L*W*H)						
	PACKING	0.34Kg ; 40pcs/14.6Kg/0.92CUFT						

NOTE

1. All parameters NOT specially mentioned are measured at 230VAC input, rated load and 25℃ of ambient temperature.
2. Ripple & noise are measured at 20MHz of bandwidth by using a 12" twisted pair-wire terminated with a 0.1uf & 47uf parallel capacitor.
3. Tolerance : includes set up tolerance, line regulation and load regulation.
4. Line regulation is measured from low line to high line at rated load.
5. Load regulation is measured from 0% to 100% rated load.
6. Length of set up time is measured at cold first start. Turning ON/OFF the power supply very quickly may lead to increase of the set up time.
7. The ambient temperature derating of 5℃/1000m is needed for operating altitude greater than 2000m(6500ft).
8. The power supply is considered a component which will be installed into a final equipment. All the EMC tests are been executed by mounting the unit on a 360mm*360mm metal plate with 1mm of thickness. The final equipment must be re-confirmed that it still meets EMC directives. For guidance on how to perform these EMC tests, please refer to “EMI testing of component power supplies.” (as available on http://www.meanwell.com)

■ Block Diagram

fosc : 65KHz

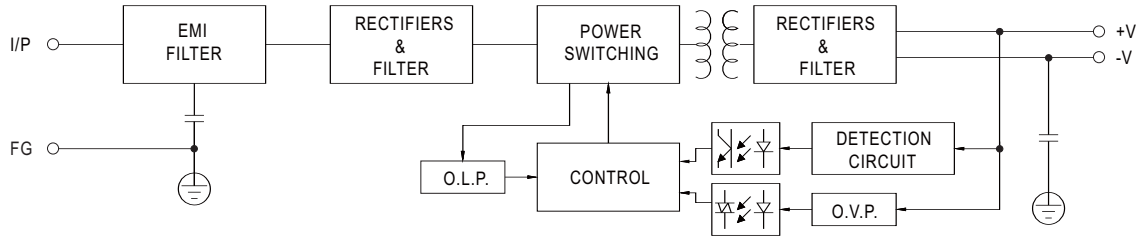

■ Derating Curve

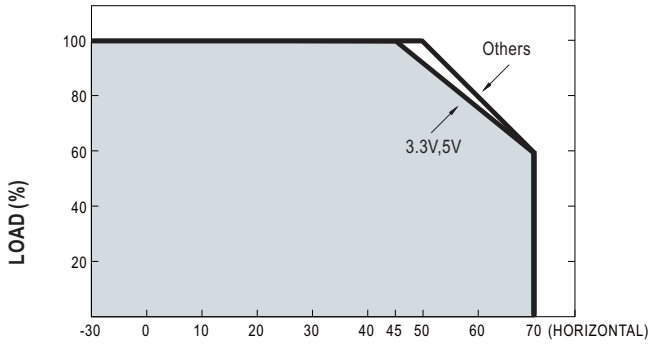

■ Static Characteristics

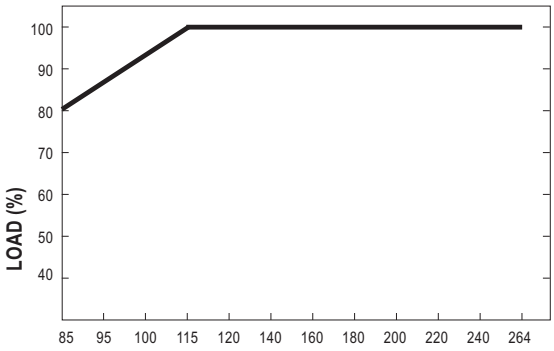

■ Mechanical Specification

Case No.238A Unit:mm

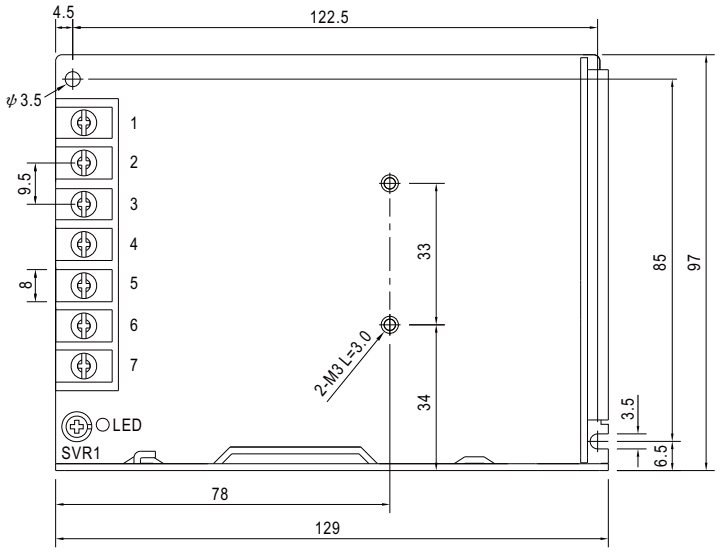

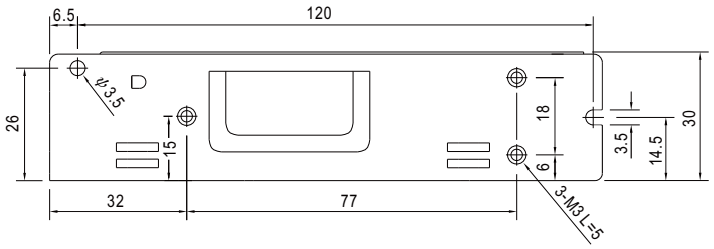

Terminal Pin No. Assignment

Pin No.	Assignment	Pin No.	Assignment
1	AC/L	4,5	DC OUTPUT -V
2	AC/N	6,7	DC OUTPUT +V
3	FG ⏚		

■ Installation Manual

Please refer to : http://www.meanwell.com/manual.html

MEAN WELL

200W Single Output Switching Power Supply

LRS-200 series



(Note.9)

Features

- AC input range selectable by switch
- Withstand 300VAC surge input for 5 second
- Protections: Short circuit / Overload / Over voltage / Over temperature
- Cooling by free air convection
- 1U low profile
- Withstand 5G vibration test
- LED indicator for power on
- No load power consumption<0.75W
- 100% full load burn-in test
- High operating temperature up to 70℃
- Operating altitude up to 5000 meters (Note.8)
- High efficiency, long life and high reliability
- 3 years warranty

Applications

- Industrial automation machinery
- Industrial control system
- Mechanical and electrical equipment
- Electronic instruments, equipments or apparatus

Description

LRS-200 series is a 200W single-output enclosed type power supply with 30mm of low profile design. Adopting the input of 115VAC or 230VAC (select by switch), the entire series provides an output voltage line of 3.3V, 4.2V, 5V, 12V, 15V, 24V, 36V and 48V.

In addition to the high efficiency up to 90%, the design of metallic mesh case enhances the heat dissipation of LRS-200 that the whole series operates from -25℃ through 70℃ under air convection without a fan. Delivering an extremely low no load power consumption (less than 0.75W), it allows the end system to easily meet the worldwide energy requirement. LRS-200 has the complete protection functions and 5G anti-vibration capability; it is complied with the international safety regulations such as UL 60950-1.

LRS-200 series serves as a high price-to-performance power supply solution for various industrial applications.

Model Encoding

LRS - 200 - 3.3

- 3.3 — Output voltage
- 200 — Output power
- LRS — Series name

200W Single Output Switching Power Supply — LRS-200 series

SPECIFICATION

MODEL		LRS-200-3.3	LRS-200-4.2	LRS-200-5	LRS-200-12	LRS-200-15	LRS-200-24	LRS-200-36	LRS-200-48
OUTPUT	DC VOLTAGE	3.3V	4.2V	5V	12V	15V	24V	36V	48V
	RATED CURRENT	40A	40A	40A	17A	14A	8.8A	5.9A	4.4A
	CURRENT RANGE	0 ~ 40A	0 ~ 40A	0 ~ 40A	0 ~ 17A	0 ~ 14A	0 ~ 8.8A	0 ~ 5.9A	0 ~ 4.4A
	RATED POWER	132W	168W	200W	204W	210W	211.2W	212.4W	211.2W
	RIPPLE & NOISE (max.) Note.2	150mVp-p	150mVp-p	150mVp-p	150mVp-p	150mVp-p	150mVp-p	200mVp-p	200mVp-p
	VOLTAGE ADJ. RANGE	2.97 ~ 3.6V	3.6 ~ 4.4V	4.5 ~ 5.5V	10.2 ~ 13.8V	13.5 ~ 18V	21.6 ~ 28.8V	32.4 ~ 39.6V	43.2 ~ 52.8V
	VOLTAGE TOLERANCE Note.3	±3.0%	±4.0%	±3.0%	±1.5%	±1.0%	±1.0%	±1.0%	±1.0%
	LINE REGULATION Note.4	±0.5%	±0.5%	±0.5%	±0.5%	±0.5%	±0.5%	±0.5%	±0.5%
	LOAD REGULATION Note.5	±2.5%	±2.5%	±2.0%	±1.0%	±0.5%	±0.5%	±0.5%	±0.5%
	SETUP, RISE TIME	1300ms, 50ms/230VAC 1300ms,50ms/115VAC at full load							
	HOLD UP TIME (Typ.)	16ms/230VAC 12ms/115VAC at full load							
INPUT	VOLTAGE RANGE	90 ~ 132VAC / 180 ~ 264VAC by switch 240 ~ 370VDC (switch on 230VAC)							
	FREQUENCY RANGE	47 ~ 63Hz							
	EFFICIENCY (Typ.)	83%	86%	87%	87.5%	88%	89.5%	89.5%	90%
	AC CURRENT (Typ.)	4A/115VAC 2.2A/230VAC							
	INRUSH CURRENT (Typ.)	COLD STAR 60A/115VAC 60A/230VAC							
	LEAKAGE CURRENT	<2mA / 240VAC							
PROTECTION	OVER LOAD	110 ~ 140% rated output power							
		Protection type : Hiccup mode, recovers automatically after fault condition is removed							
	OVER VOLTAGE	3.8 ~ 4.45V	4.6 ~ 5.4V	5.75 ~ 6.75V	13.8 ~ 16.2V	18 ~ 21V	28.8 ~ 33.6V	41.4 ~ 46.8V	55.2 ~ 64.8V
		Protection type : Hiccup mode, recovers automatically after fault condition is removed							
	OVER TEMPERATURE	Hiccup mode, recovers automatically after fault condition is removed							
ENVIRONMENT	WORKING TEMP.	-25 ~ +70℃ (Refer to "Derating Curve")							
	WORKING HUMIDITY	20 ~ 90% RH non-condensing							
	STORAGE TEMP., HUMIDITY	-40 ~ +85℃, 10 ~ 95% RH							
	TEMP. COEFFICIENT	±0.03%/℃ (0 ~ 50℃)							
	VIBRATION	10 ~ 500Hz, 5G 10min./1cycle, 60min. each along X, Y, Z axes							
SAFETY	SAFETY STANDARDS	UL60950-1, BSMI CNS14336-1, EAC TP TC 004 approved							
	WITHSTAND VOLTAGE	I/P-O/P:3KVAC I/P-FG:2KVAC O/P-FG:0.5KVAC							
	ISOLATION RESISTANCE	I/P-O/P, I/P-FG, O/P-FG:100M Ohms / 500VDC / 25℃/ 70% RH							
	EMC EMISSION	Compliance to BSMI CNS13438, EAC TP TC 020							
	EMC IMMUNITY	Compliance to EAC TP TC 020							
OTHERS	MTBF	347.5K hrs min. MIL-HDBK-217F (25℃)							
	DIMENSION	215*115*30mm (L*W*H)							
	PACKING	0.66Kg; 15pcs/10.9Kg/0.78CUFT							

NOTE

1. All parameters NOT specially mentioned are measured at 230VAC input, rated load and 25℃ of ambient temperature.
2. Ripple & noise are measured at 20MHz of bandwidth by using a 12" twisted pair-wire terminated with a 0.1uf & 47uf parallel capacitor.
3. Tolerance : includes set up tolerance, line regulation and load regulation.
4. Line regulation is measured from low line to high line at rated load.
5. Load regulation is measured from 0% to 100% rated load.
6. Length of set up time is measured at cold first start. Turning ON/OFF the power supply very quickly may lead to increase of the set up time.
7. The 150% peak load capability is built in for up to 1 second for 12~48V.LRS-200 will enter hiccup mode if the peak load is delivered for over 1 second and will recover once it resumes to the rated current level(115VAC/230VAC).
8. The ambient temperature derating of 5℃/1000m is needed for operating altitude greater than 2000m(6500ft).
9. This power supply does not meet the harmonic current requirements outlined by EN61000-3-2. Please do not use this power supply under the following conditions:
   a) the end-devices is used within the European Union, and
   b) the end-devices is connected to public mains supply with 220Vac or greater rated nominal voltage, and
   c) the power supply is:
      - installed in end-devices with average or continuous input power greater than 75W, or
      - belong to part of a lighting system

   Exception:
   Power supplies used within the following end-devices do not need to fulfill EN61000-3-2
   a) professional equipment with a total rated input power greater than 1000W;
   b) symmetrically controlled heating elements with a rated power less than or equal to 200W

■ Block Diagram

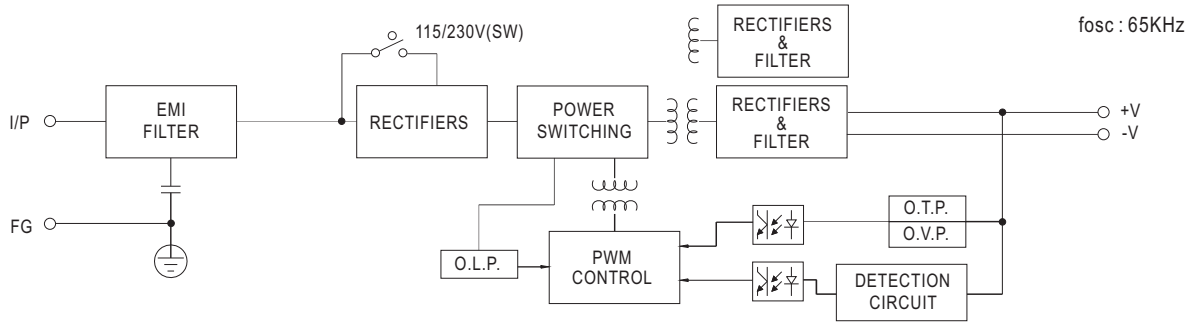

■ Derating Curve

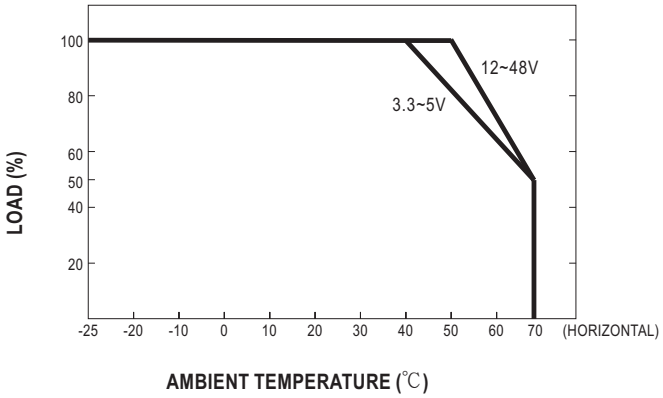

■ Static Characteristics

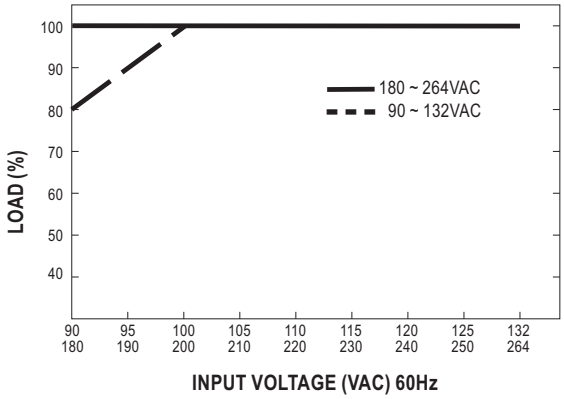

■ Mechanical Specification

Case No. 207 Unit:mm

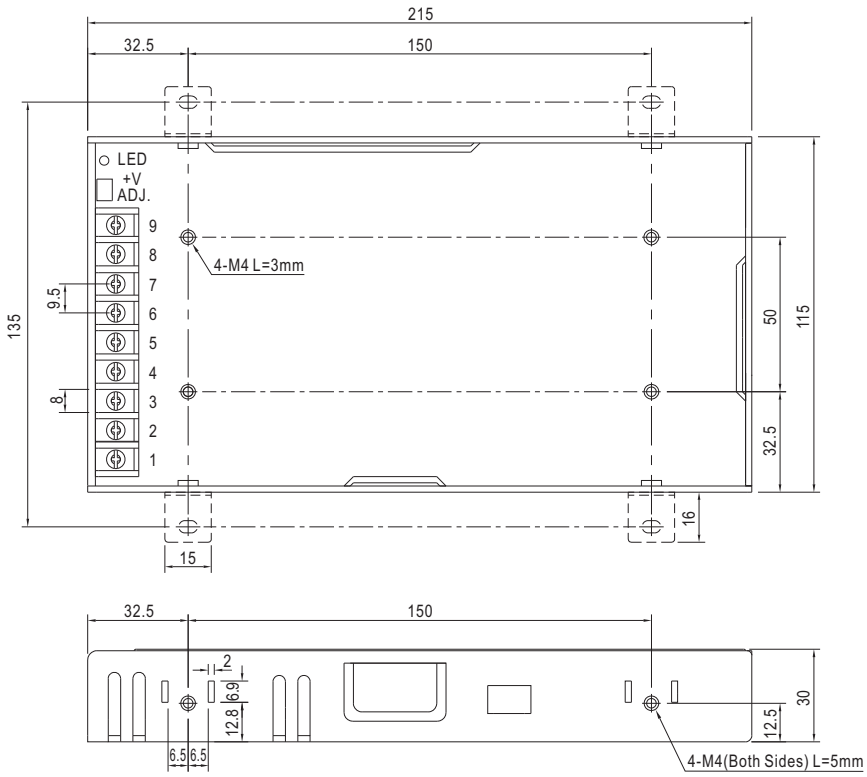

Terminal Pin No. Assignment :

Pin No.	Assignment	Pin No.	Assignment
1	AC/L	4~6	DC OUTPUT -V
2	AC/N	7~9	DC OUTPUT +V
3	FG ⏚		

■ Installation Manual

Please refer to : http://www.meanwell.com/manual.html

MEAN WELL

350W Single Output Switching Power Supply

LRS-350 series



(Note.9)

Features

- AC input range selectable by switch
- Withstand 300VAC surge input for 5 second
- Protections: Short circuit / Overload / Over voltage / Over temperature
- Forced air cooling by built-in DC fan
- Built-in cooling Fan ON-OFF control
- 1U low profile
- Withstand 5G vibration test
- LED indicator for power on
- No load power consumption<0.75W
- 100% full load burn-in test
- High operating temperature up to 70℃
- Operating altitude up to 5000 meters (Note.8)
- High efficiency, long life and high reliability
- 3 years warranty

Applications

- Industrial automation machinery
- Industrial control system
- Mechanical and electrical equipment
- Electronic instruments, equipments or apparatus

Description

LRS-350 series is a 350W single-output enclosed type power supply with 30mm of low profile design. Adopting the input of 115VAC or 230VAC (select by switch), the entire series provides an output voltage line of 3.3V, 4.2V, 5V, 12V, 15V, 24V, 36V and 48V.

In addition to the high efficiency up to 89%, with the built-in long life fan LRS-350 can work under -25~+70℃ with full load. Delivering an extremely low no load power consumption (less than 0.75W), it allows the end system to easily meet the worldwide energy requirement. LRS-350 has the complete protection functions and 5G anti-vibration capability; it is complied with the international safety regulations such as UL60950-1. LRS-350 series serves as a high price-to-performance power supply solution for various industrial applications.

Model Encoding

LRS - 350 - 3.3

- 3.3 — Output voltage
- 350 — Output power
- LRS — Series name

SPECIFICATION

MODEL		LRS-350-3.3	LRS-350-4.2	LRS-350-5	LRS-350-12	LRS-350-15	LRS-350-24	LRS-350-36	LRS-350-48
OUTPUT	DC VOLTAGE	3.3V	4.2V	5V	12V	15V	24V	36V	48V
	RATED CURRENT	60A	60A	60A	29A	23.2A	14.6A	9.7A	7.3A
	CURRENT RANGE	0 ~ 60A	0 ~ 60A	0 ~ 60A	0 ~ 29A	0 ~ 23.2A	0 ~ 14.6A	0 ~ 9.7A	0 ~ 7.3A
	RATED POWER	198W	252W	300W	348W	348W	350.4W	349.2W	350.4W
	RIPPLE & NOISE (max.) Note.2	150mVp-p	150mVp-p	150mVp-p	150mVp-p	150mVp-p	150mVp-p	200mVp-p	200mVp-p
	VOLTAGE ADJ. RANGE	2.97 ~ 3.6V	3.6 ~ 4.4V	4.5 ~ 5.5V	10.2 ~ 13.8V	13.5 ~ 18V	21.6 ~ 28.8V	32.4 ~ 39.6V	43.2 ~ 52.8V
	VOLTAGE TOLERANCE Note.3	±4.0%	±4.0%	±3.0%	±1.5%	±1.0%	±1.0%	±1.0%	±1.0%
	LINE REGULATION Note.4	±0.5%	±0.5%	±0.5%	±0.5%	±0.5%	±0.5%	±0.5%	±0.5%
	LOAD REGULATION Note.5	±2.5%	±2.5%	±2.0%	±1.0%	±0.5%	±0.5%	±0.5%	±0.5%
	SETUP, RISE TIME	1300ms, 50ms/230VAC 1300ms,50ms/115VAC at full load							
	HOLD UP TIME (Typ.)	16ms/230VAC 12ms/115VAC at full load							
INPUT	VOLTAGE RANGE	90 ~ 132VAC / 180 ~ 264VAC by switch 240 ~ 370VDC (switch on 230VAC)							
	FREQUENCY RANGE	47 ~ 63Hz							
	EFFICIENCY (Typ.)	79.5%	81.5%	83.5%	85%	86%	88%	88.5%	89%
	AC CURRENT (Typ.)	6.8A/115VAC 3.4A/230VAC							
	INRUSH CURRENT (Typ.)	60A/115VAC 60A/230VAC							
	LEAKAGE CURRENT	<2mA / 240VAC							
PROTECTION	OVER LOAD	110 ~ 140% rated output power							
		Protection type : Hiccup mode, recovers automatically after fault condition is removed							
	OVER VOLTAGE	3.8 ~ 4.45V	4.6 ~ 5.4V	5.75 ~ 6.75V	13.8 ~ 16.2V	18 ~ 21V	28.8 ~ 33.6V	41.4 ~ 46.8V	55.2 ~ 64.8V
		Protection type : Hiccup mode, recovers automatically after fault condition is removed							
	OVER TEMPERATURE	Hiccup mode, recovers automatically after fault condition is removed							
FUNCTION	FAN ON/OFF CONTROL (Typ.)	RTH3≧50℃ FAN ON, ≦40℃ FAN OFF							
ENVIRONMENT	WORKING TEMP.	-25 ~ +70℃ (Refer to "Derating Curve")							
	WORKING HUMIDITY	20 ~ 90% RH non-condensing							
	STORAGE TEMP., HUMIDITY	-40 ~ +85℃, 10 ~ 95% RH							
	TEMP. COEFFICIENT	±0.03%/℃ (0 ~ 50℃)							
	VIBRATION	10 ~ 500Hz, 5G 10min./1cycle, 60min. each along X, Y, Z axes							
SAFETY	SAFETY STANDARDS	UL60950-1, BSMI CNS14336-1, EAC TP TC 004 approved							
	WITHSTAND VOLTAGE	I/P-O/P:3KVAC I/P-FG:2KVAC O/P-FG:0.5KVAC							
	ISOLATION RESISTANCE	I/P-O/P, I/P-FG, O/P-FG:100M Ohms/500VDC / 25℃/ 70% RH							
	EMC EMISSION	Compliance to BSMI CNS13438, EAC TP TC 020							
	EMC IMMUNITY	Compliance to EAC TP TC 020							
OTHERS	MTBF	327.9K hrs min. MIL-HDBK-217F (25℃)							
	DIMENSION	215*115*30mm (L*W*H)							
	PACKING	0.76Kg; 15pcs/12.4Kg/0.78CUFT							

NOTE

1. All parameters NOT specially mentioned are measured at 230VAC input, rated load and 25□ of ambient temperature.
2. Ripple & noise are measured at 20MHz of bandwidth by using a 12" twisted pair-wire terminated with a 0.1uf & 47uf parallel capacitor.
3. Tolerance : includes set up tolerance, line regulation and load regulation.
4. Line regulation is measured from low line to high line at rated load.
5. Load regulation is measured from 0% to 100% rated load.
6. Length of set up time is measured at cold first start. Turning ON/OFF the power supply very quickly may lead to increase of the set up time.
7. The 150% peak load capability is built in for up to 1 second for 12~48V.LRS-350 will enter hiccup mode if the peak load is delivered for over 1 second and will recover once it resumes to the rated current level(115VAC/230VAC).
8. The ambient temperature derating of 5□ /1000m is needed for operating altitude greater than 2000m(6500ft).
9. This power supply does not meet the harmonic current requirements outlined by EN61000-3-2. Please do not use this power supply under the following conditions:
   a) the end-devices is used within the European Union, and
   b) the end-devices is connected to public mains supply with 220Vac or greater rated nominal voltage, and
   c) the power supply is:
      - installed in end-devices with average or continuous input power greater than 75W, or
      - belong to part of a lighting system

   Exception:
   Power supplies used within the following end-devices do not need to fulfill EN61000-3-2
   a) professional equipment with a total rated input power greater than 1000W;
   b) symmetrically controlled heating elements with a rated power less than or equal to 200W

Block Diagram

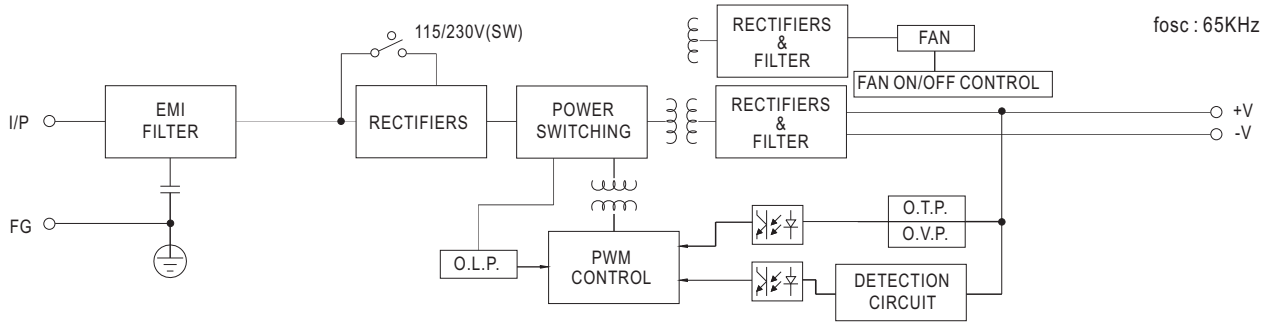

Derating Curve

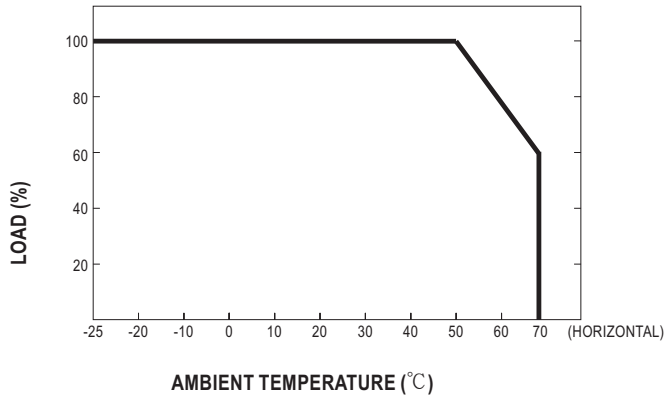

Static Characteristics

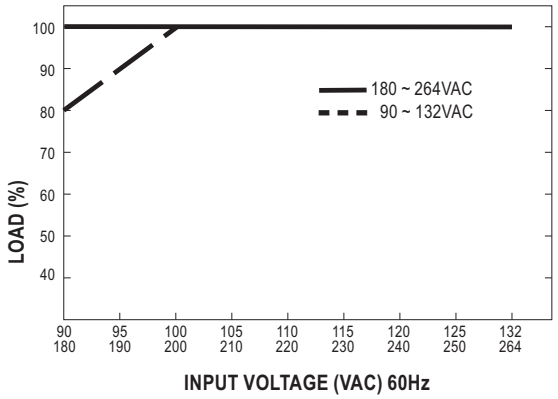

■ Mechanical Specification

Case No.207A Unit:mm

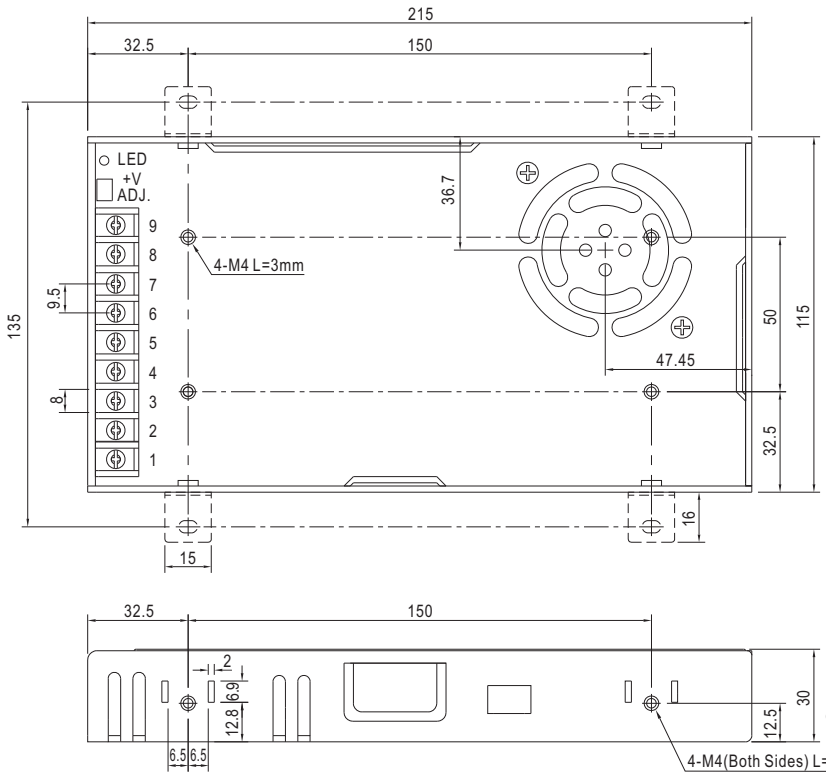

Terminal Pin No. Assignment :

Pin No.	Assignment	Pin No.	Assignment
1	AC/L	4~6	DC OUTPUT -V
2	AC/N	7~9	DC OUTPUT +V
3	FG ⏚		

■ Installation Manual

Please refer to : http://www.meanwell.com/manual.html