Shinko

Digital Indicating Controllers

BCx2 series

Indicating Controller

A New Standard

ISO9001

ISO14001
(HQ only)



Contains frequently used setting items (in Initial setting mode)

Program control, converter function are standard features

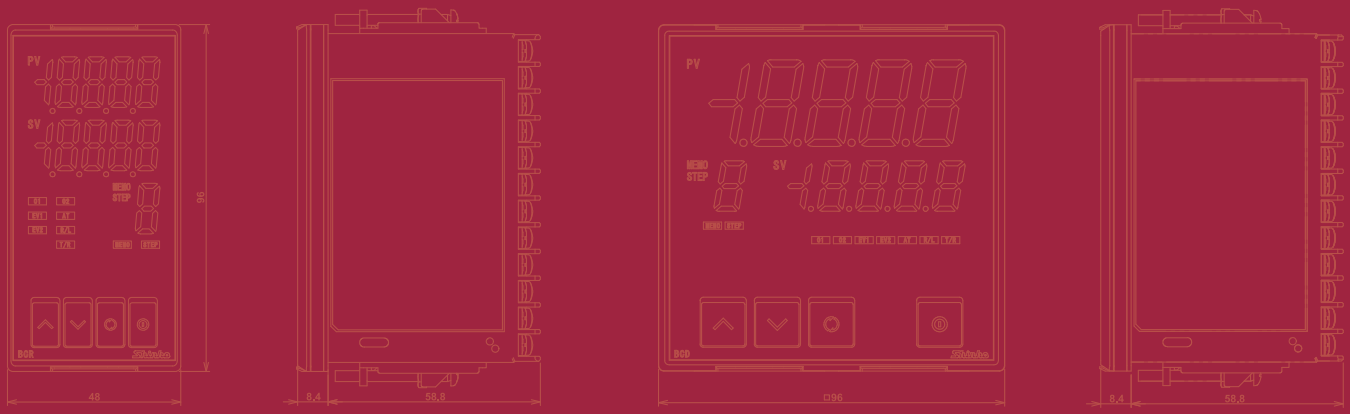

5-digit displays suit many industries

Drip-proof / Dust-proof IP66 (front panel only)

Quicker Setting Time — Frequently Used Items in One Mode

Contains frequently used setting items in Initial Setting mode.
Control can be started by setting those items in this mode.
Set other functions according to your requirements.

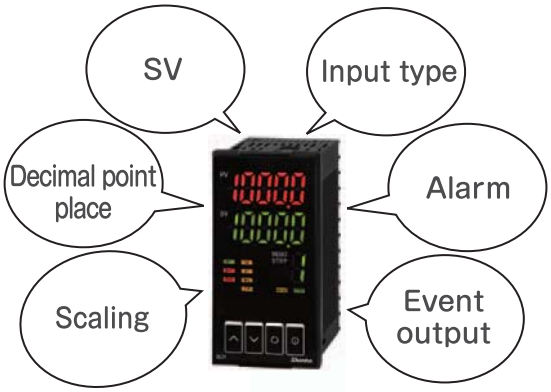

Simplified Program Control

9-step pattern (for SV and time) is a standard feature.

Number of patterns	1
Number of steps	9
Number of repetitions	0 to 10000 times
Program time range	00:00 to 99:59 (Hours:Minutes, Minutes:Seconds)

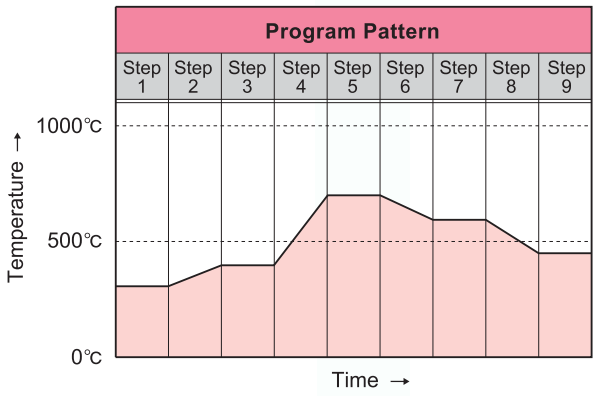

(e.g.) Temperature program control

Simplified Converter Function

Input signals can be converted to insulated 4 to 20 mA DC output (for direct current output type).

5-digit PV, SV Displays



A wide range of information is displayed. (Model shown: BCD2)

Large Buttons



Easy to press
(Model shown: BCS2)

Control Panel Interior Depth 60 mm

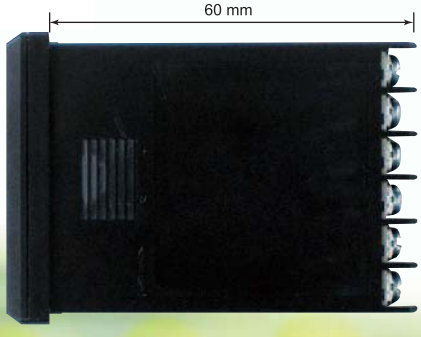

Each unit needs just 60 mm of control panel space.
(Model shown: BCS2)

Simple Settings from a PC

By connecting to a PC, various settings can be carried out.
[Tool cable (sold separately) and Software (charge-free) are required.]

- The setting contents of the 1st unit can be copied to other units with a single click (when using controllers with the same specifications).
- Logging and monitoring are possible! Logging data can be saved as a CSV file.



Power to the BCx2 is supplied by PC via USB.

Communication Cables (Sold Separately)

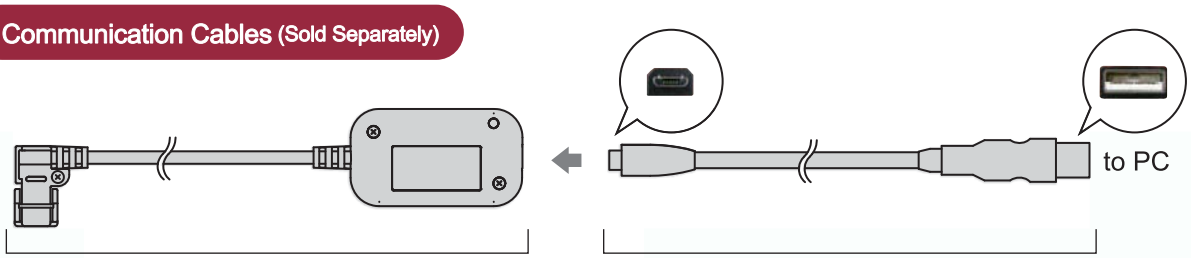

Tool cable (CMD-001)
(Cable length 200 mm)
(CMD-001 is a Shinko cable, available from our suppliers.)

USB cable (CUS-100)
(microUSB Type B – USB Type A Full length 2 m)
(Commercially available USB cable can be used.)

Dedicated Software

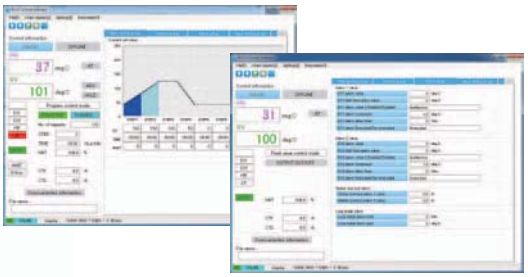

OS: Windows 7/8 (Japanese/English)
http://shinko-technos.co.jp/e/ ⟶ Support & Downloads ⟶ Downloads ⟶ Software ⟶
BCx2 series console software (SWC-BCx01M)



Model

Size	Control Output	Power Supply	Input (*1)	Option 1 (*2)	Option 2 (*2)	Specification	
BCS2						48×48 mm (W×H) (Control panel interior depth 60 mm)	
BCR2						48×96 mm (W×H) (Control panel interior depth 60 mm)	
BCD2						96×96 mm (W×H) (Control panel interior depth 60 mm)	
	R					Relay contact	
	S					Non-contact voltage (for SSR drive)	
	A					Direct current	
		0				100 to 240 V AC	
		1				24 V AC/DC	
			0			Multi-range (*1)	
				0		No option needed	
				1		Event output EV2 (*3)	EV2
				2		Heating/Cooling control output OUT2, Non-contact voltage	DS
				3		Heating/Cooling control output OUT2, Direct current	DA
				4		Insulated power output	P24
					0	No option needed	
					1	Event input (2 points) + Serial communication + Heater burnout alarm (20A) (*4)(*5)	C5W (20A)
					2	Event input (2 points) + Serial communication + Heater burnout alarm (100A) (*4)(*5)	C5W (100A)
					3	Event input (2 points) + Heater burnout alarm (20A) (*5)	EIW (20A)
					4	Event input (2 points) + Heater burnout alarm (100A) (*5)	EIW (100A)
					5	Event input (2 points) + External setting input+Transmission output (*6)	EIT
					6	Serial communication	C5
					7	Heater burnout alarm (20A) (*5)	W (20A)
					8	Heater burnout alarm (100A) (*5)	W (100A)
					9	Event input (2 points)	EI

(e.g.)

BCS2 R 0 0- 13

- Size: 48 x 48 mm (W x H)
- Control output: Relay contact
- Power supply: 100 to 240 V AC
- Input: Multi-range
- Option 1: Event output EV2
- Option 2: Event input (2 points) + Heater burnout alarm (20A)

(*1) Thermocouple, RTD, Direct current and DC voltage can be selected by keypad.
(*2) Only one option can be selected from Option 1 and Option 2 respectively.
(*3) Event output EV1 is standard.
The following outputs can be selected in [Event output EV1/EV2 allocation] by keypad:
Alarm output (12 alarm types and No alarm action), Heater burnout alarm output, Loop break alarm output, Time signal output, Output during AT, Pattern end output, Output by communication command, Heating/Cooling control output OUT2 (for EV2 option only)
For Event output EV1/EV2, Heater burnout alarm output and Output by communication command are available when C5W, EIW, C5 or W option is ordered.
(*4) For the BCS2, 2 points of Event input are not available.
(*5) For direct current output type, Heater burnout alarm is disabled. The CT is sold separately.
(*6) For the BCS2, 1 point of Event input is available.

Accessories Sold Separately

Model
Terminal cover
CT for 20A (CTL-6-S-H) (*)
CT for 100A (CTL-12-S36-10L1U) (*)
Tool cable (CMD-001)
USB cable (CUS-100)

(*) Used for Heater burnout alarm (C5W, EIW, W options)

Specifications

Input	Thermocouple:	K, J, R, S, B, E, T, N, PL-II, C (W/Re5-26), External resistance: 100 Ω max. (However, B: 40 Ω max.)
	RTD:	Pt100, JPt100, 3-wire type, Allowable input lead wire resistance: 10 Ω max. per wire
	Direct current:	0 to 20 mA, 4 to 20 mA DC: Input impedance: 50 Ω, Allowable input current: 50 mA max.
	DC voltage:	0 to 1 V DC: Input impedance: 1 MΩ min. Allowable input voltage: 5 V DC max. Allowable signal source resistance: 2 kΩ max. 0 to 5 V, 1 to 5 V, 0 to 10 V DC: Input impedance: 100 kΩ min. Allowable input voltage: 15 V DC max. Allowable signal source resistance: 100 Ω max.

Basic accuracy [At ambient temperature 23℃ (for a single unit mounting)]	Thermocouple: Within ± 0.2% of each input span ± 1 digit However, R, S inputs, 0 to 200℃ (32 to 392℉): Within ± 6℃ (12℉) B input, 0 to 300℃ (0 to 572℉): Accuracy is not guaranteed. K, J, E, T, N inputs, Less than 0℃ (32℉): Within ± 0.4% of input span ± 1 digit RTD: Within ± 0.1% of each input span ± 1 digit Direct current: Within ± 0.2% of each input span ± 1 digit DC voltage: Within ± 0.2% of each input span ± 1 digit
Input sampling period	125 ms
Control output	Relay contact 1a: Control capacity: 3 A 250 V AC (resistive load), 1 A 250 V AC (inductive load cosϕ=0.4) Electrical life: 100,000 cycles Minimum applicable load: 10 mA 5 V DC Non-contact voltage (for SSR drive): 12 V DC ± 15%, Max 40 mA (short circuit protected) Direct current: 4 to 20 mA DC (Resolution: 12000), Load resistance: Max 550 Ω
Event output EV1	Relay contact 1a: Control capacity: 3 A 250 V AC (resistive load), 1 A 250 V AC (inductive load cosϕ=0.4) Electrical life: 100,000 cycles Minimum applicable load: 10 mA 5 V DC
Program control	Number of patterns: 1 Number of steps: 9 Number of repetitions: 0 to 10000 Program time range: 00:00 to 99:59 (Hours:Minutes or Minutes:Seconds) Setting range: Scaling low limit value to Scaling high limit value (Factory default: 0℃) Time setting accuracy: Within ± 1.0% of setting time Wait value : 0 to Converted value of 20% of input span (Direct current, voltage inputs: 0 to Converted value of 20% of scaling span)
Event input (Optional)	If 'Set value memory' is selected in [Event input DI1/DI2 allocation], SV1 to SV4 are available. Circuit current when Closed: Approx.16 mA
Transmission output (Optional)	Resolution: 12000 Output: 4 to 20 mA DC (Load resistance: Max 550 Ω) Output accuracy: Within ± 0.3% of Transmission output span
Serial communication (Optional)	Communication line: EIA RS-485 Communication method: Half-duplex communication Synchronization method: Start-stop synchronization Communication speed: 9600, 19200, 38400 bps (Selectable by keypad) (Factory default: 9600 bps) Data bit: 7 or 8 (Factory default: 7 bits) Parity: Even, Odd, No parity (Selectable by keypad) (Factory default: Even) Stop bit: 1 or 2 (Selectable by keypad) (Factory default: 1) Data format:

Communication Protocol	Shinko Protocol	Modbus ASCII	Modbus RTU
Start bit	1	1	1
Data bit	7	7 or 8	8
Parity	Yes (Even)	Yes (Even, Odd), No parity	Yes (Even, Odd), No parity
Stop bit	1	1 or 2	1 or 2

Response delay time: 0 to 1000 ms (Factory default: 10 ms)
Response from the controller can be delayed after receiving command from the host computer.

Standards	EN: EN61010-1 (Pollution degree 2, Overvoltage category II)
Environmental specification	RoHS directive compliant

Terminal Arrangement

BCS2

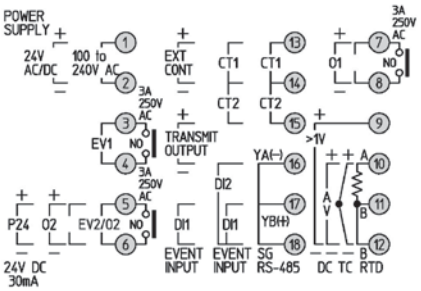

BCR2 BCD2

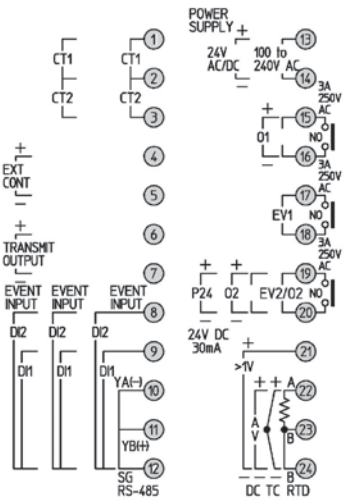

POWER SUPPLY	100 to 240 V AC or 24 V AC/DC [For a 24 V AC/DC power source, do not confuse polarity when using direct current (DC)]
EV1	Event output 1
EV2	Event output 2 (EV2 option)
O2	Control output OUT2 (EV2, DS, DA options)
P24	24 V DC insulated power output (P24 option)
O1	Control output OUT1
TC	Thermocouple input
RTD	RTD input
DC	DC voltage, Direct current inputs
CT1	CT input 1 (C5W, EIW, W options)
CT2	CT input 2 (C5W, EIW, W options)
RS-485	Serial communication RS-485 (C5W, C5 option)
EVENT INPUT	Event input DI1 (BCS2: EIW, EIT, EI options, BCR2/BCD2: C5W, EIW, EIT, EI options) Event input DI2 (BCS2: EIW, EI options, BCR2/BCD2: C5W, EIW, EIT, EI options)
EXT CONT	External setting input (EIT option)
TRANSMIT OUTPUT	Transmission output (EIT option)

Dimensions (Scale: mm)

BCS2

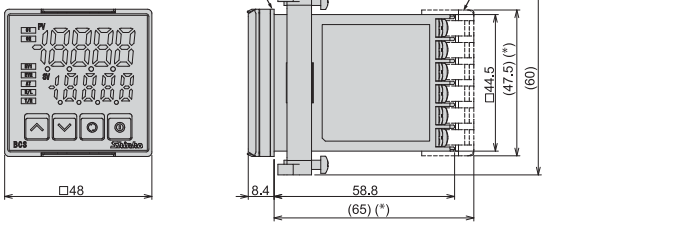

BCR2

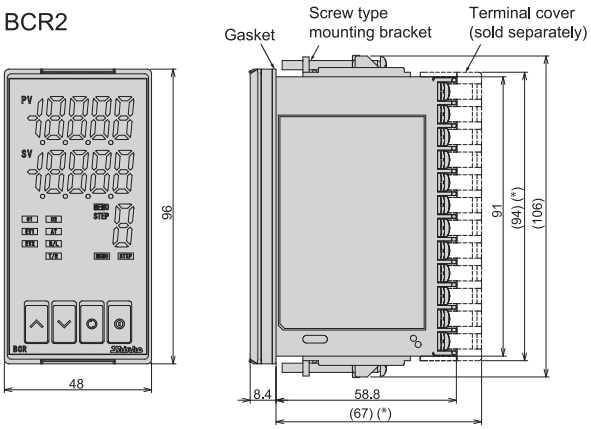

BCD2

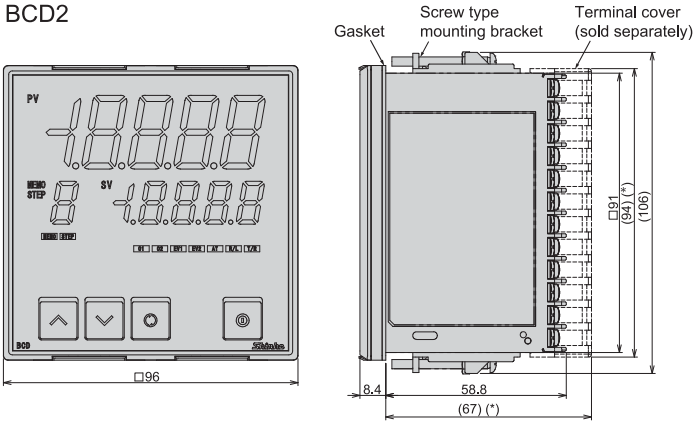

(*) : When terminal cover is used

Panel Cutout (Scale: mm)

BCS2

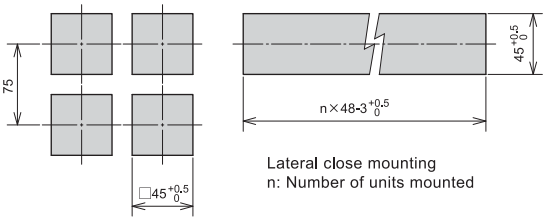

Lateral close mounting
n: Number of units mounted

BCR2

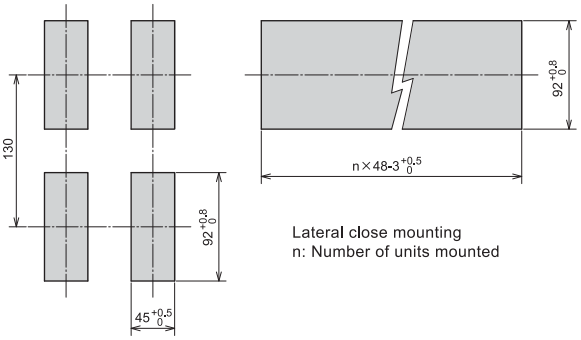

Lateral close mounting
n: Number of units mounted

BCD2

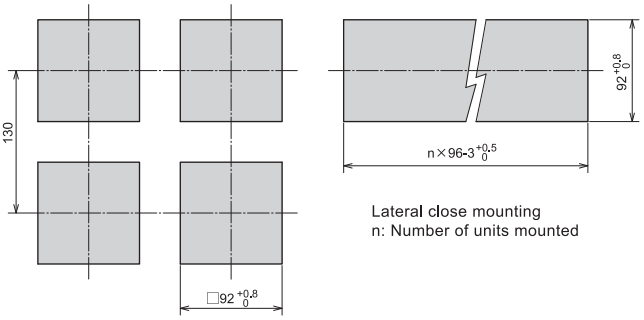

Lateral close mounting
n: Number of units mounted

Caution

If lateral close mounting is used for the controller, Drip-proof/Dust-proof IP66 may be compromised, and all warranties will be invalidated.

SAFETY PRECAUTIONS

- To ensure safe and correct use, thoroughly read and understand the manual before using this instrument.
- This instrument is intended to be used for industrial machinery, machine tools and measuring equipment. Verify correct usage after consulting purpose of use with our agency or main office. (Never use this instrument for medical purposes with which human lives are involved.)
- External protection devices such as protection equipment against excessive temperature rise, etc. must be installed, as malfunction of this product could result in serious damage to the system or injury to personnel. Also proper periodic maintenance is required.
- This instrument must be used under the conditions and environment described in the manual. Shinko Technos Co., Ltd. does not accept liability for any injury, loss of life or damage occurring due to the instrument being used under conditions not otherwise stated in this manual.

Caution with respect to Export Trade Control Ordinance

To avoid this instrument from being used as a component in, or as being utilized in the manufacture of weapons of mass destruction (i.e. military applications, military equipment, etc.), please investigate the end users and the final use of this instrument.
In the case of resale, ensure that this instrument is not illegally exported.

· This catalog is as of November 2014 and its contents are subject to change without notice.
· If you have any inquiries, please consult us or our agency.

SHINKO TECHNOS CO., LTD.
OVERSEAS DIVISION

Head Office : 2-5-1, Senbahigashi, Minoo, Osaka, 562-0035, Japan
Tel : +81-72-727-6100
Fax : +81-72-727-7006
URL : http://www.shinko-technos.co.jp/e/
E-mail : overseas@shinko-technos.co.jp

201411 E03